Pulse Width Modulation Generator

- Computer Aided Design -

Student:

Sălăgean David Andrei
e_2021

Coordinator:

Assist. Prof. Raul Fizeșan
PhD Eng.

Table of Contents

1 Introduction 4
1.1 Project Overview 4
1.2 Requirements 4
1.3 Software Tools 4
2 Circuit Architecture 5
2.1 Functional Blocks 5
2.1.1 Triangle Signal Generator 5
2.1.2 Voltage Reference 6
2.1.3 Voltage Comparator 6
2.1.4 Amplitude Control Circuit 7
2.1.5 Output Stage (Voltage Follower and Protection) 7
2.2 Complete Electrical Schematic 8
3 Component Sizing and Details 9
3.1 Component Selection 9
3.2 Component Sizing Calculations 9
3.2.1 Sizing the Triangle Signal Generator 9
3.2.2 Sizing the Voltage Reference (Duty Cycle Control) 10
3.2.3 Sizing the Amplitude Adjustment Circuit 10
4 Simulations and Testing 11
4.1 Transient Analysis 11
4.1.1 Minimum Duty Cycle and Amplitude 11
4.1.2 Maximum Duty Cycle and Amplitude 12
4.2 Parametric Sweep Analysis 12
4.2.1 Duty Cycle Sweep 12
4.2.2 Amplitude Sweep 13
4.3 Monte Carlo Analysis 14
4.3.1 Impact on Output Frequency 14
4.4 Impact on Maximum Amplitude 15
4.5 Worst-Case Analysis 15
5 Bill of Materials 16
6 Conclusion 17
7 References 18

List of Figures

Figure 2.1- Block Diagram of PWM Generator 5
Figure 2.2 - Triangular Signal Generator 5
Figure 2.3 - Voltage Reference Schematic 6
Figure 2.4 - Voltage Comparator 6
Figure 2.5 - Amplitude Control Circuit 7
Figure 2.6 - Voltage Follower and Protection Circuit 7
Figure 2.7 – PWM Generator Complete Electrical Schematic 8
Figure 4.1 - Transient Response at D=40%, A=3V 11
Figure 4.2 - Transient Response at D=70%, A=6V 12
Figure 4.3 - Parametric Sweep of the DUTY_CYCLE_SET Parameter 12
Figure 4.4 - Performance Analysis of Duty Cycle Variation 13
Figure 4.5 - Parametric Sweep of the AMPLITUDE_SET Parameter 13
Figure 4.6 - Performance Analysis of Amplitude Variation 14
Figure 4.7 - Monte Carlo Analysis of Output Frequency 14
Figure 4.8 - Monte Carlo Analysis of Maximum Amplitude 15
Figure 4.9 - Worst-Case Analysis Results 15

List of Tables

Table 1.1 - Requirements 4
Table 5.1 - Bill of Materials 16

1 Introduction

1.1 Project Overview

The objective of this project is to design, size, and simulate a Pulse Width Modulation (PWM) Generator using the OrCAD Capture and PSpice software suite. The core task involves calculating the appropriate component values to meet a precise set of performance requirements and subsequently validating the circuit's behaviour through comprehensive simulations, including transient, parametric, and statistical analyses.

1.2 Requirements

The designed circuit must meet the following criteria, as shown in Table 1:

Parameter	**Specification**
Operating frequency	15 kHz
Adjustable Duty Cycle	40% to 70%
Adjustable Amplitude	3V to 6V

Table 1.1 - Requirements

1.3 Software Tools

The entire design and simulation process was conducted using the OrCAD suite. OrCAD Capture was employed for schematic design, allowing for the visual construction of the circuit. PSpice was used for in-depth simulation and performance analysis, enabling virtual testing to ensure the design met all specifications before physical implementation.

2 Circuit Architecture

The PWM generator is designed as a modular system, consisting of several interconnected functional blocks. This modular approach simplifies the design and analysis process. The overall architecture is depicted in the block diagram in Figure 2.1.

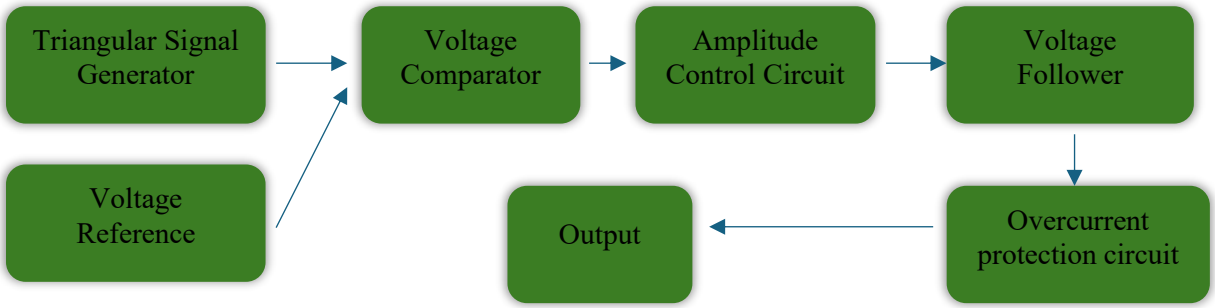

Figure 2.1- Block Diagram of PWM Generator

2.1 Functional Blocks

2.1.1 Triangle Signal Generator

This block forms the core of the PWM circuit, generating a stable, periodic triangular waveform. The frequency of this waveform directly sets the operating frequency of the PWM output. The generator is implemented using an integrator and a Schmitt trigger in a feedback loop, a classic and reliable topology.

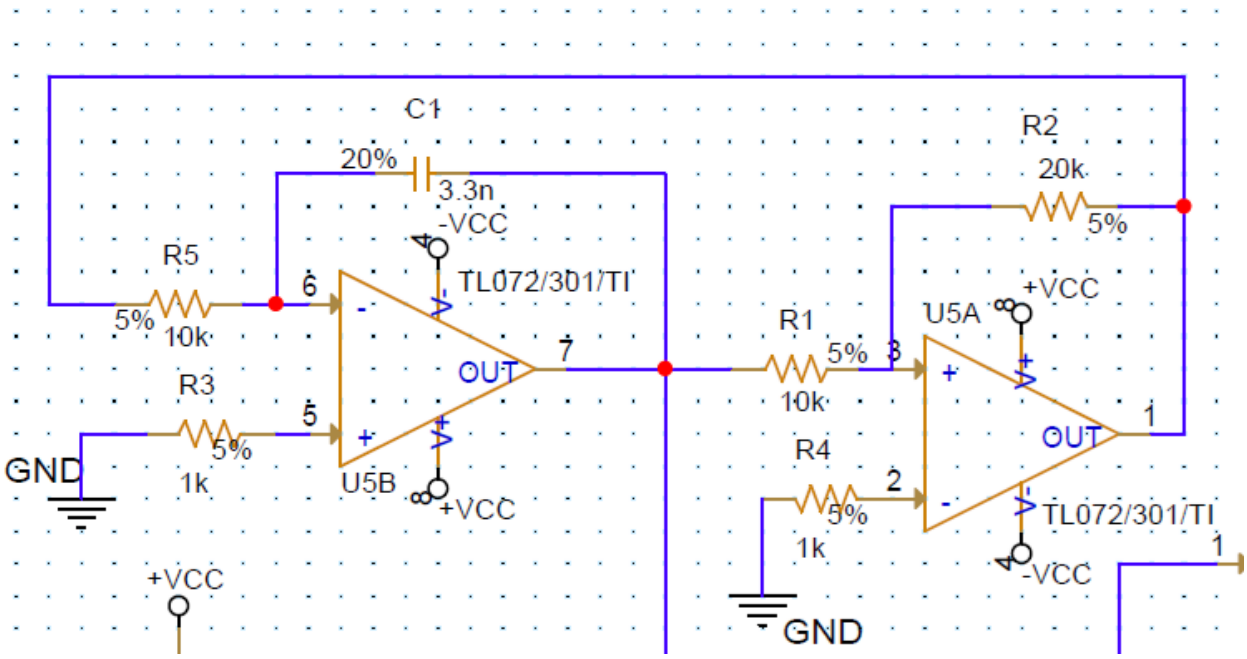

Figure 2.2 - Triangular Signal Generator

2.1.2 Voltage Reference

This block provides a stable and adjustable DC reference voltage. This voltage is fed into the voltage comparator, where it is compared against the triangular waveform. The level of this DC voltage is the primary control for the PWM signal's duty cycle.

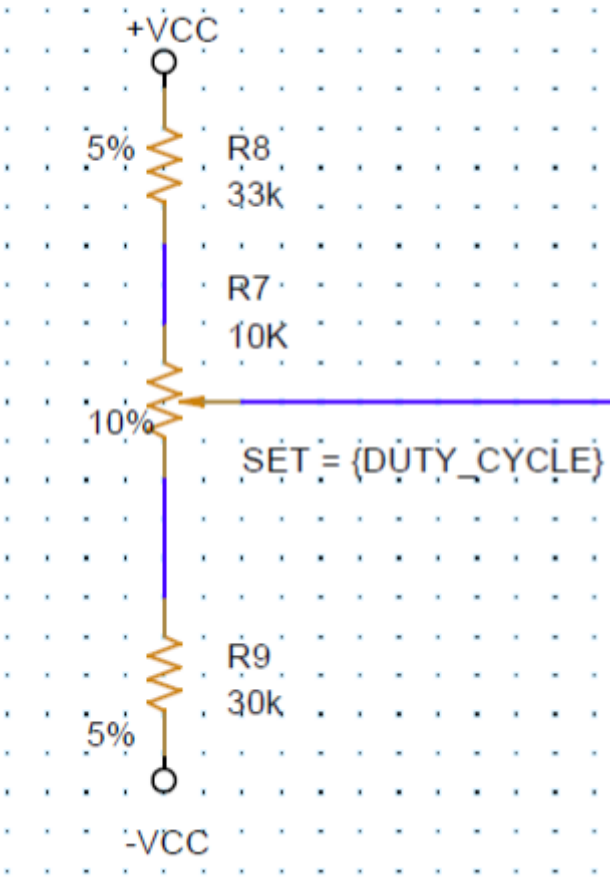

Figure 2.3 - Voltage Reference Schematic

2.1.3 Voltage Comparator

The comparator continuously compares the instantaneous voltage of the triangular signal with the DC reference voltage. Its output is a raw digital PWM signal that switches between high and low saturation states, with pulse widths determined by the comparison.

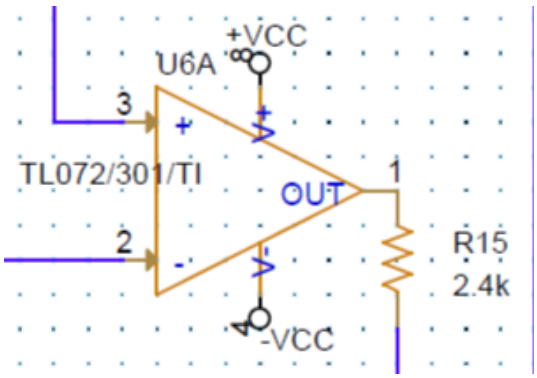

Figure 2.4 - Voltage Comparator

2.1.4 Amplitude Control Circuit

This stage takes the raw PWM signal from the comparator and scales its amplitude. It is a voltage divider network that allows the output signal's peak voltage to be adjusted within the required range without affecting its frequency or duty cycle.

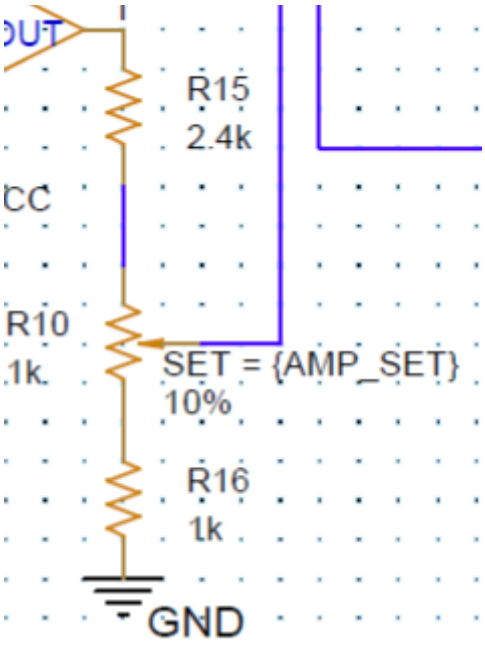

Figure 2.5 - Amplitude Control Circuit

2.1.5 Output Stage (Voltage Follower and Protection)

The final stage consists of a voltage follower (buffer) and an overcurrent protection circuit. The voltage follower, built with a power OpAmp (LM675), provides the necessary current to drive loads without affecting the signal's integrity. The overcurrent protection circuit safeguards the output transistors from damage in case of a short circuit or overload.

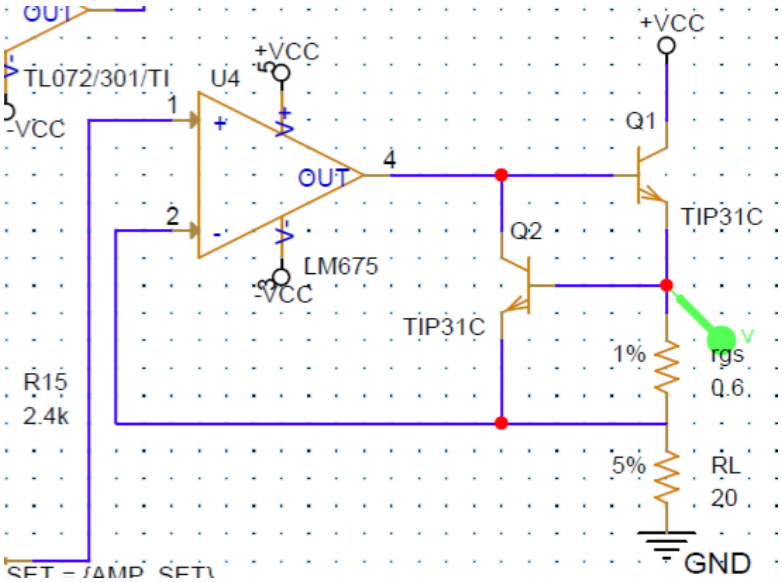

Figure 2.6 - Voltage Follower and Protection Circuit

2.2Complete Electrical Schematic

The full electrical schematic, integrating all the functional blocks and control parameters (DUTY_SET, AMP_SET), is presented in Figure 2.7.

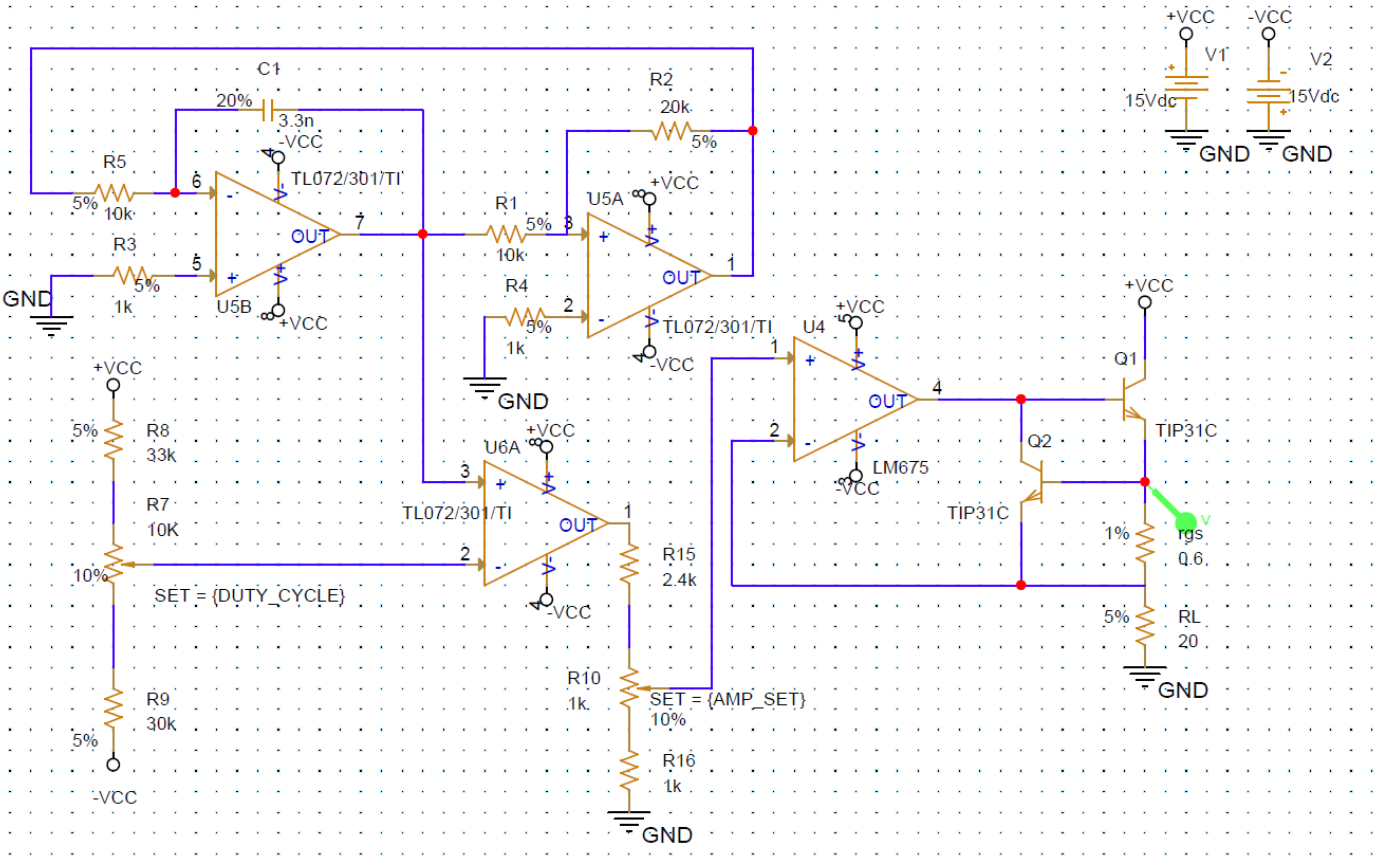

Figure 2.7 – PWM Generator Complete Electrical Schematic

3 Component Sizing and Details

3.1 Component Selection

The components were selected to balance performance, cost, and availability. The TL072 JFET-input operational amplifier was chosen for the signal generation and comparison stages due to its adequate slew rate for 15 kHz operation and low noise characteristics. For the output buffer stage, the LM675 power OpAmp was selected for its high current drive capability, which is essential for driving low-impedance loads. Resistors from the E24 series with 5% tolerance were used for most of the circuit, providing a good trade-off between precision and cost.

3.2 Component Sizing Calculations

To meet the project requirements, each critical component was sized using the fundamental formulas governing the circuit's behaviour.

3.2.1 Sizing the Triangle Signal Generator

The frequency of the triangular wave generator is determined by the formula:

$$f = \frac{R^2}{(4 \cdot R^1 \cdot R^5 \cdot C^1)}$$

The peak amplitude of the triangular wave depends on the saturation voltage of the Schmitt trigger's OpAmp (Vsat) and the ratio of resistors R1 and R2. For a TL072 powered at ±15V, the saturation voltage is approximately Vsat≈±13.5V. The peak voltages are:

$$V\Delta, max = \left(\frac{R_1}{R_2}\right) \cdot Vsat \quad \text{and} \quad V\Delta, min = -\left(\frac{R_1}{R_2}\right) \cdot Vsat$$

As a design choice, a peak amplitude of ±6.75V is targeted to ensure the signal remains well within the supply rails. This leads to the following ratio:

$$6.75V = \frac{R_1}{R_2} * 13.5V \Longrightarrow \frac{R_1}{R_2} = 0.5$$

Standard E24 series values are chosen to satisfy this ratio: R1 = 10kΩ and R2 = 20kΩ.

With the frequency set to f = 15 kHz, we can rearrange the main formula. A common design practice is to select a standard value for another component, such as R5 = 10kΩ, and then calculate the required capacitance for C1:

$$C_1 = \frac{R^2}{(4 \cdot R^1 \cdot R^5 \cdot f)} = \frac{20 * 10^3}{4 * (10 * 10^3) * (10 * 10^3) * 15000} \approx 3.33\, nF$$

The nearest standard E-series capacitor value is C1 = 3.3nF.

3.2.2 Sizing the Voltage Reference (Duty Cycle Control)

The duty cycle (D) is controlled by the reference voltage (Vref) according to the relation:

$$Vref = 2 \cdot V\Delta, max \cdot (1 - D) - V\Delta, max$$

To achieve a duty cycle range of 40% to 70%, the reference voltage must vary between:

For D = 40%: $Vref, max = 2 * 6.75V * (1 - 0.4) - 6.75V = +1.35V$;(Vref,max = +1.35V)

For D = 70%: $Vref, min = 2 * 6.75V * (1 - 0.7) - 6.75V = -2.7V$; (Vref,min = -2.7V)

The voltage divider, consisting of R8, R9, and the 10kΩ potentiometer R7, must provide this voltage range. This leads to a system of two equations for the potentiometer's endpoints. Solving this system yields the theoretical values R8≈33.7kΩ and R9≈30.3kΩ. The closest standard E24 values are selected:

$$R8 = 33k\Omega$$

$$R9 = 30k\Omega$$

3.2.3 Sizing the Amplitude Adjustment Circuit

The output amplitude is scaled by a voltage divider network composed of R15, R16, and the 1kΩ potentiometer R10. The input to this divider is the comparator's output, with a peak voltage of Vsat≈13.5V. To achieve an adjustable range of 3V to 6V, we solve the system of equations for the two endpoints of the potentiometer. This calculation yields the theoretical values R15=2.5kΩ and R16=1kΩ. The nearest standard E24 values are:

$$R15 = 2.4k\Omega$$

$$R16 = 1k\Omega$$

4 Simulations and Testing

A series of PSpice simulations were conducted to validate the design and verify that all requirements from Table 1.1 were met.

4.1 Transient Analysis

Transient analysis was used to observe the circuit's behaviour in the time domain, confirming the correct generation of waveforms and the functionality of the control parameters.

4.1.1 Minimum Duty Cycle and Amplitude

The circuit was simulated at its lower operational limits by setting DUTY_CYCLE_SET=0 and AMPLITUDE_SET=1. The resulting waveform, shown in Figure 4.1, confirms an output signal with a duty cycle close to 40% and an amplitude of approximately 3V.

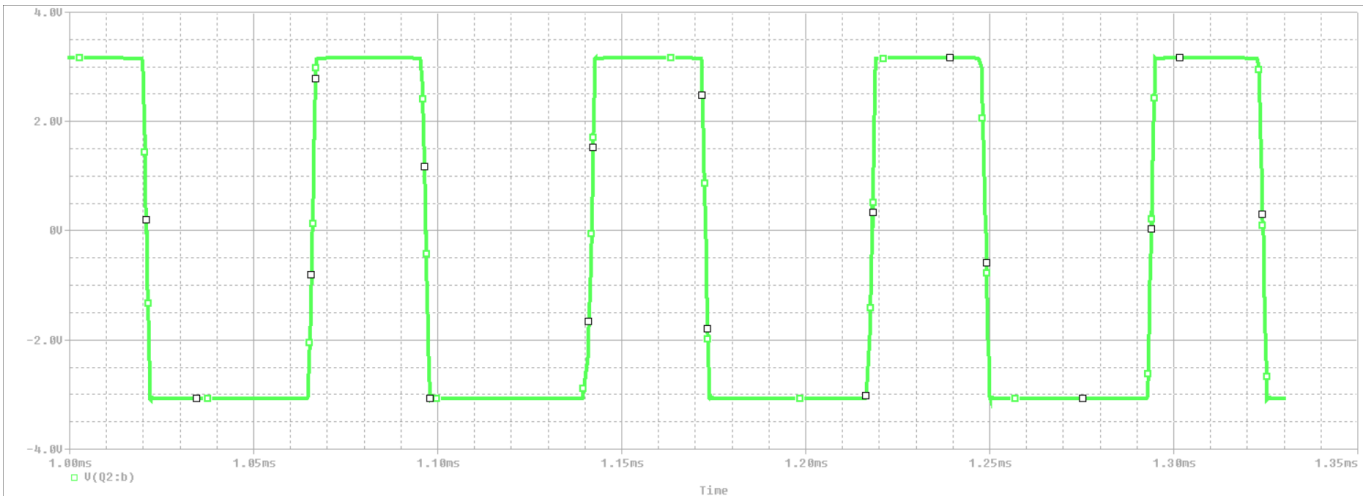

Figure 4.1 - Transient Response at D=40%, A=3V

4.1.2 Maximum Duty Cycle and Amplitude

The circuit was then simulated at its upper operational limits by setting DUTY_CYCLE_SET=1 and AMPLITUDE_SET=0. Figure 4.2 shows the output waveform, confirming a duty cycle near 70% and an amplitude of approximately 6V.

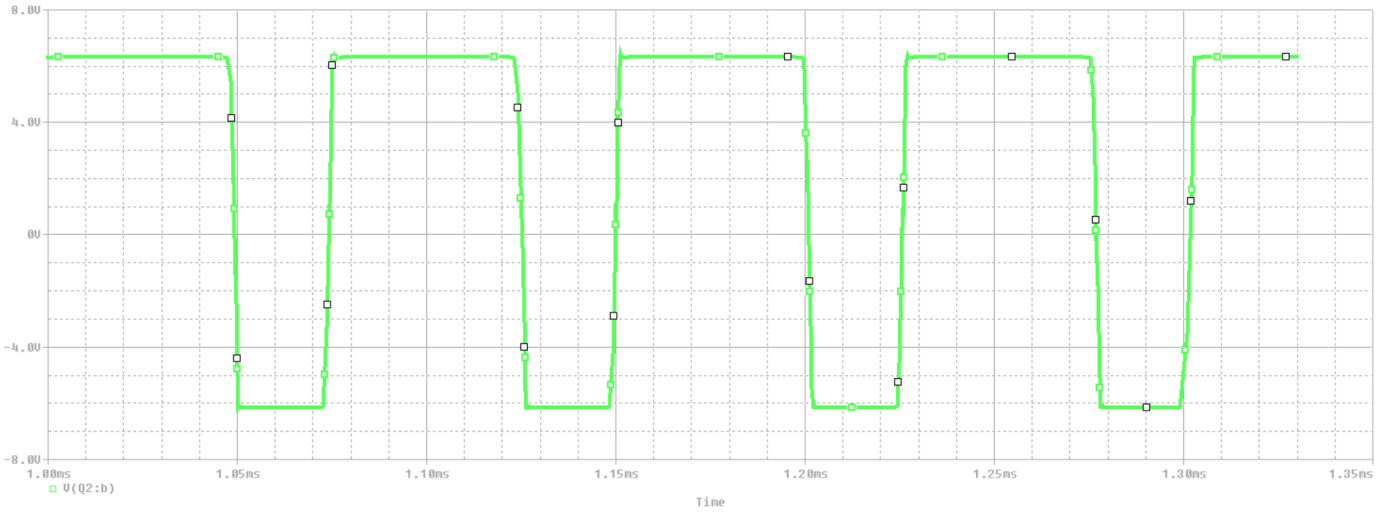

Figure 4.2 - Transient Response at D=70%, A=6V

4.2 Parametric Sweep Analysis

Parametric analysis was performed to visualize the circuit's response across the entire adjustment range of the control parameters.

4.2.1 Duty Cycle Sweep

The DUTY_CYCLE_SET parameter was swept linearly from 0 to 1. The resulting family of curves (Figure 4.3) demonstrates smooth control over the pulse width. Performance analysis (Figure 4.4) confirms that the duty cycle varies linearly within the specified 40% to 70% range.

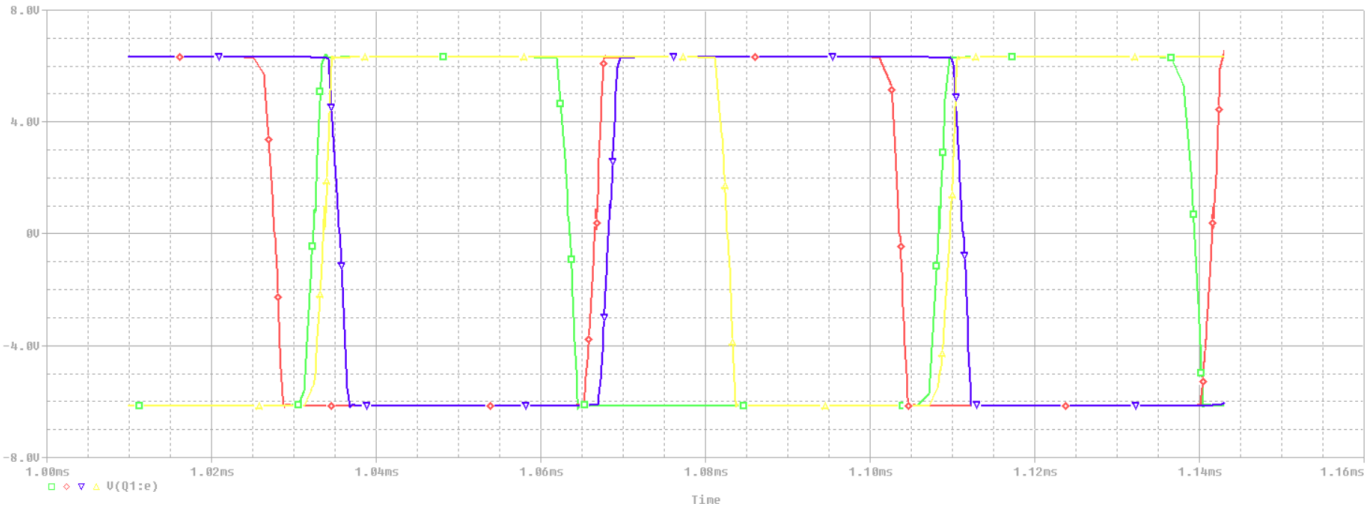

Figure 4.3 - Parametric Sweep of the DUTY_CYCLE_SET Parameter

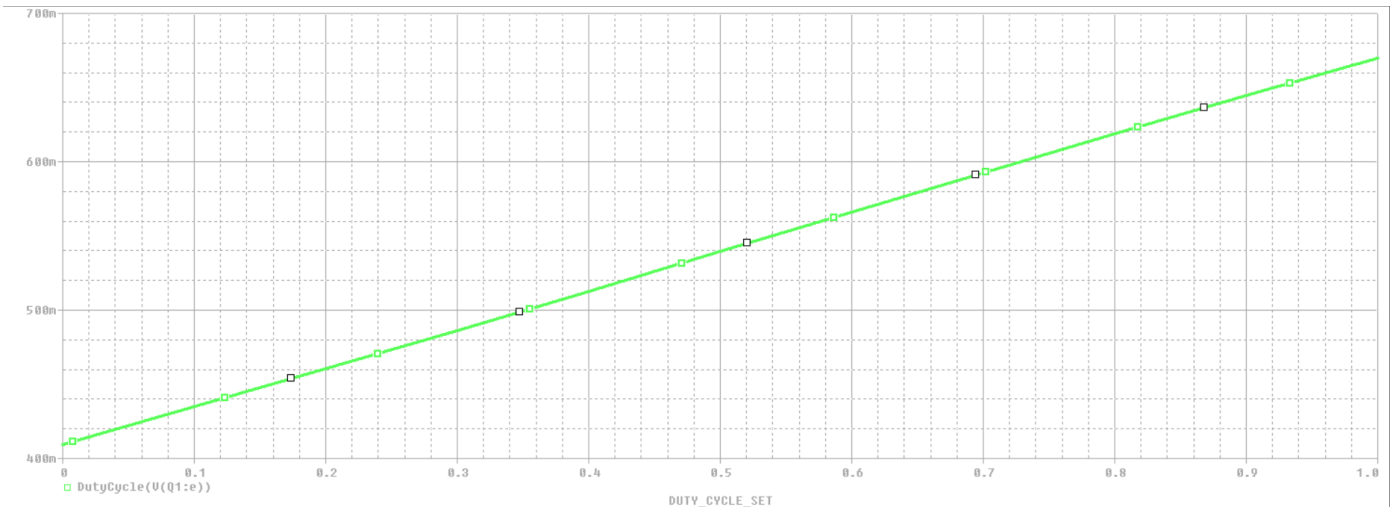

Figure 4.4 - Performance Analysis of Duty Cycle Variation

4.2.2 Amplitude Sweep

Similarly, the AMPLITUDE_SET parameter was swept from 0 to 1. The plot in Figure 4.5 illustrates the corresponding change in the output signal's amplitude. Performance analysis (Figure 4.6) validates the linear adjustment of the amplitude within the required 3V to 6V range.

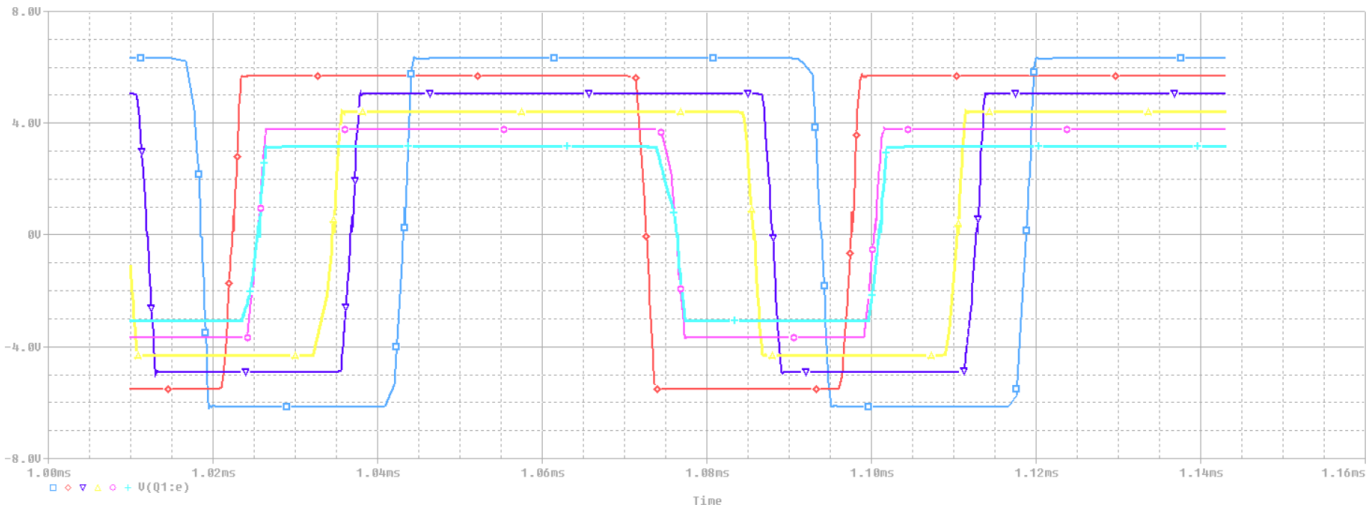

Figure 4.5 - Parametric Sweep of the AMPLITUDE_SET Parameter

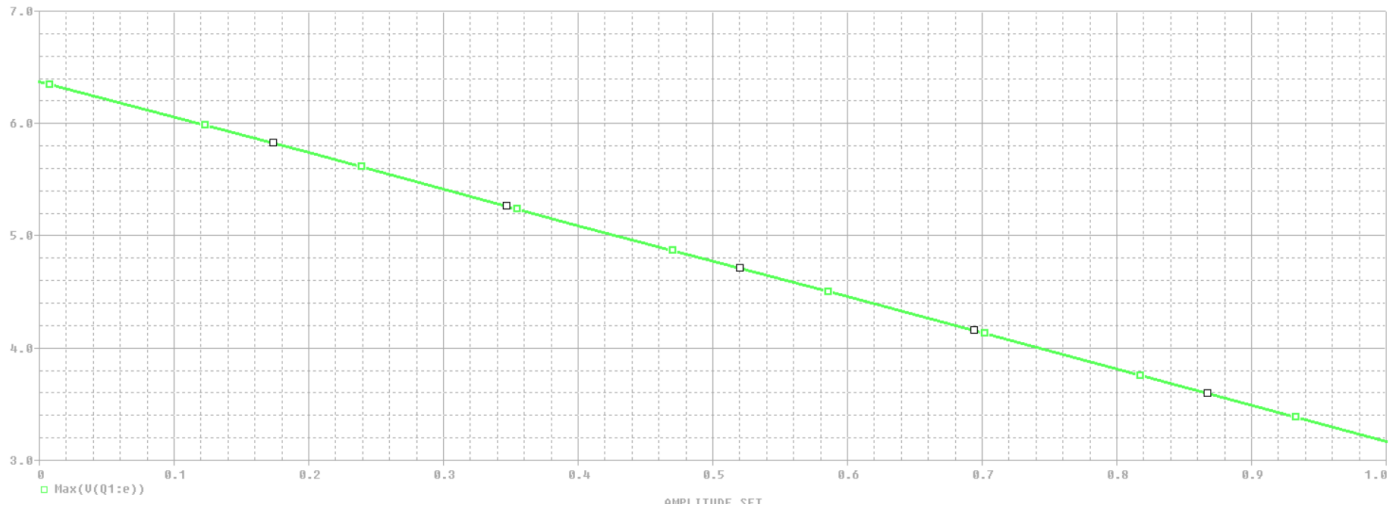

Figure 4.6 - Performance Analysis of Amplitude Variation

4.3Monte Carlo Analysis

Monte Carlo analysis was conducted to assess the circuit's robustness and predict its performance variations due to component tolerances. The simulation was run 100 times, varying all passive components within their specified tolerance ranges.

4.3.1 Impact on Output Frequency

The analysis revealed that the output frequency is the parameter most sensitive to component tolerances, varying primarily due to the tolerances of R1, R2, R5, and C1. The statistical distribution is shown in Figure 4.7.

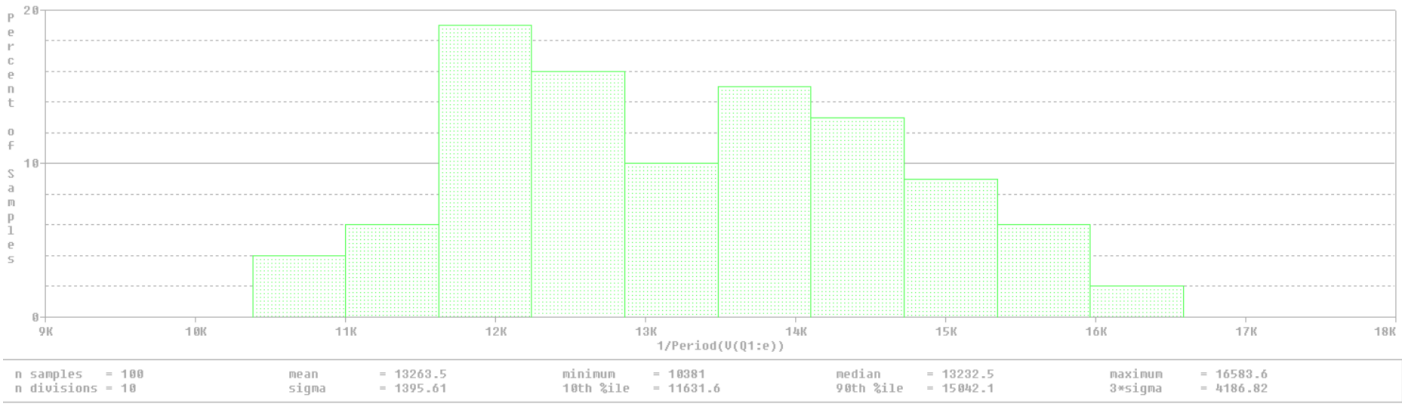

Figure 4.7 - Monte Carlo Analysis of Output Frequency

The statistical data presented below the histogram provides a quantitative summary of these variations. The mean value indicates the average frequency across all 100 runs. Sigma (standard deviation) measures the dispersion of the results from this mean value. The minimum and maximum values show the extreme frequency limits observed during the simulation, defining the total expected range of variation due to component tolerances.

4.4Impact on Maximum Amplitude

To analyze the effect of tolerances on the maximum amplitude, the AMPLITUDE_SET parameter was fixed to 0. The analysis showed that the amplitude is less sensitive to variations, with the results confirming that the output remains well within an acceptable range of the 6V target.

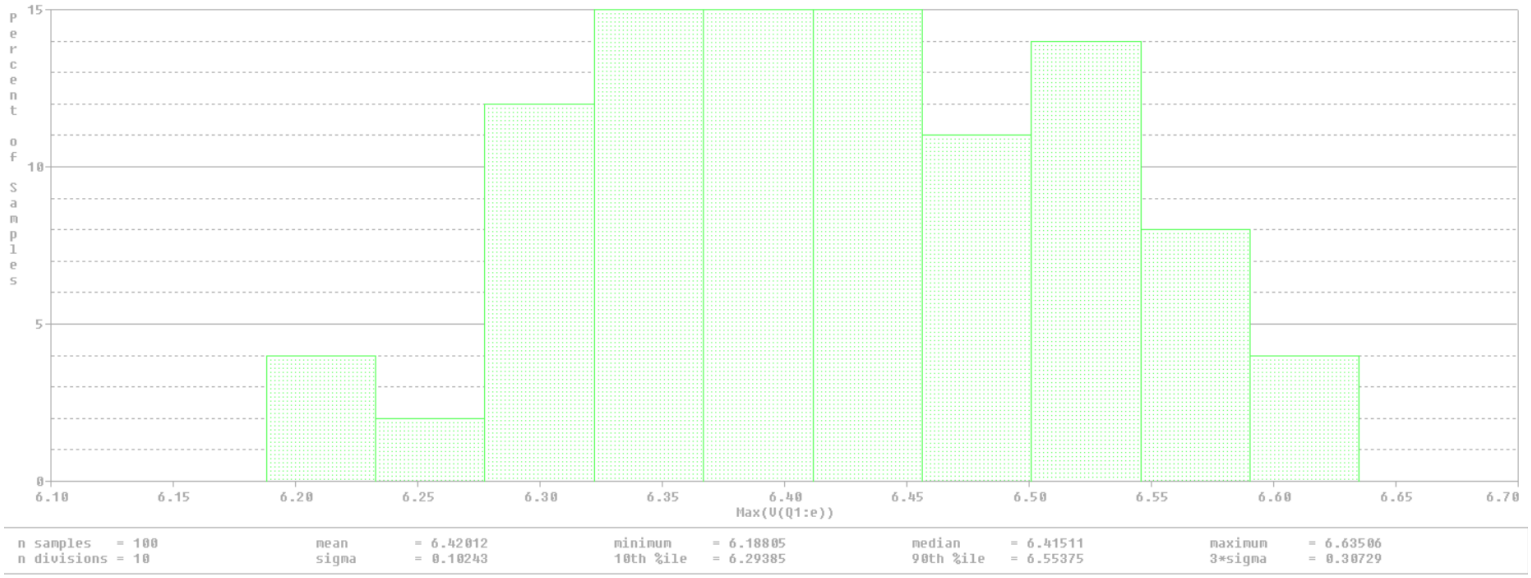

Figure 4.8 - Monte Carlo Analysis of Maximum Amplitude

4.5Worst-Case Analysis

A worst-case analysis was performed to identify which combination of component tolerances would result in the maximum deviation from nominal performance. The analysis confirms that the circuit continues to function without failure even under the most unfavourable conditions, although with predictable deviations in output parameters.

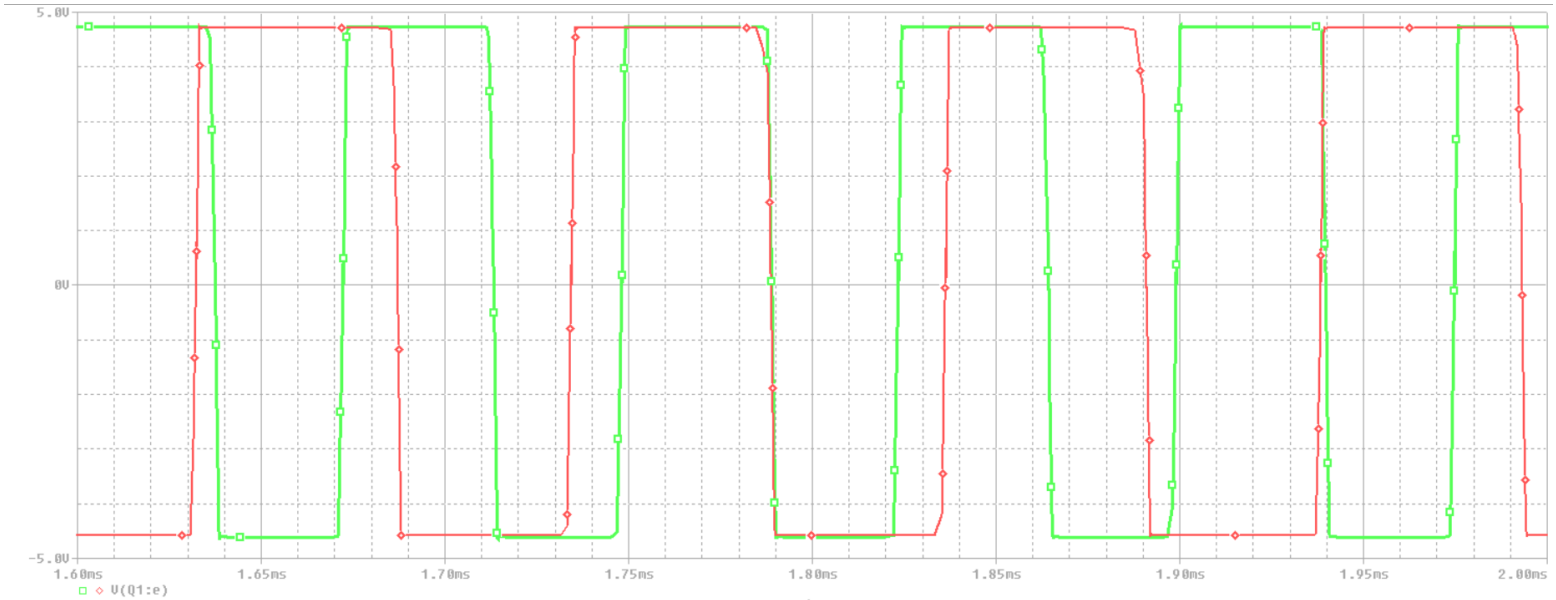

Figure 4.9 - Worst-Case Analysis Results

5 Bill of Materials

The following table lists the components required for the physical implementation of the designed PWM generator circuit.

Quantity	Reference	Part	Price(RON)
2	U5A, U6B, U7B	TL072 OpAmp	4.00
1	U9	LM675 Power OpAmp	25.00
2	Q1, Q2	BD139 NPN Transistor	2.50
1	C1	3.3nF Capacitor	0.50
1	R7	10kΩ Potentiometer	2.00
1	R10	1kΩ Potentiometer	2.00
2	R3, R4	1kΩ Resistor	0.10
1	R16	1kΩ Resistor	0.10
1	R15	2.4kΩ Resistor	0.10
3	R1, R5, R load	10kΩ Resistor	0.10
1	rgs	0.6Ω Power Resistor	1.50
1	R2	20kΩ Resistor	0.10
1	R9	30kΩ Resistor	0.10
1	R8	33kΩ Resistor	0.10
Total estimated cost:			~47.20

Table 5.1 - Bill of Materials

6 Conclusion

This project successfully demonstrates the design and simulation of a versatile PWM generator. The circuit was systematically sized to meet the stringent requirements of operating at 15 kHz with an adjustable duty cycle between 40% and 70% and a variable amplitude from 3V to 6V.

Comprehensive PSpice simulations, including transient, parametric, and statistical analyses, have validated the design's robustness and functionality. The results confirm that the circuit performs reliably and meets all specifications. The use of global parameters for control simplifies testing and makes the design suitable for advanced applications, such as the precise control of BLDC motors. With an estimated total component cost of approximately 47 RON, the project also proves to be a cost-effective solution.

7 References

[1] Texas Instruments, *TL072 Low-Noise JFET-Input Operational Amplifier Datasheet*.

[2] Texas Instruments, *LM675 Power Operational Amplifier Datasheet*.

[3] STMicroelectronics, *BD139 NPN Power Transistor Datasheet*.

[4] Wikipedia contributors. "Pulse-width modulation." *Wikipedia, The Free Encyclopedia*.